NOTES:
1. THIS DRAWING IS FOR REFERENTIAL PURPOSES ONLY, AND SHOULD NOT BE CONSIDERED AS AN ENGINEERING RESOURCE
2. DIMENSIONAL VARIATIONS MAY OCCUR RESULTING FROM TYPICAL MANUFACTURING PROCESSES, AND JOHNSON OUTDOORS IS NOT LIABLE FOR ANY VARIATIONS FOUND THEREIN
3. ILLUSTRATION SHOWN IS FOR A STARBOARD MOUNTED CONFIGURATION OF A SANDWICH STYLE ADAPTER BRACKET. (1810302 AND 1810303) THESE ADAPTER BRACKETS ARE MIRROR IMAGES OF EACH OTHER, AND THEREFORE ALL DIMENISONS SHOWN HERE WILL ALSO APPLY IN A PORT MOUNTED CONFIGURATION.
4. WEIGHT AS SHOWN IS APPROXIMATELY 19.5 LBS

REVISIONS

REV	ECN NO	DESCRIPTION	BY	DATE
1		ASSIGN DIMENSIONS FOR CUSTOMER SERVICE	GPB	3.3.13

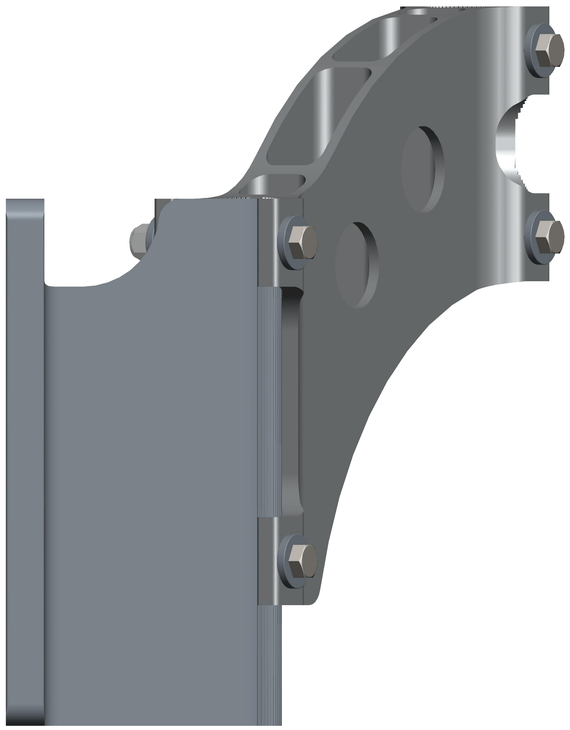

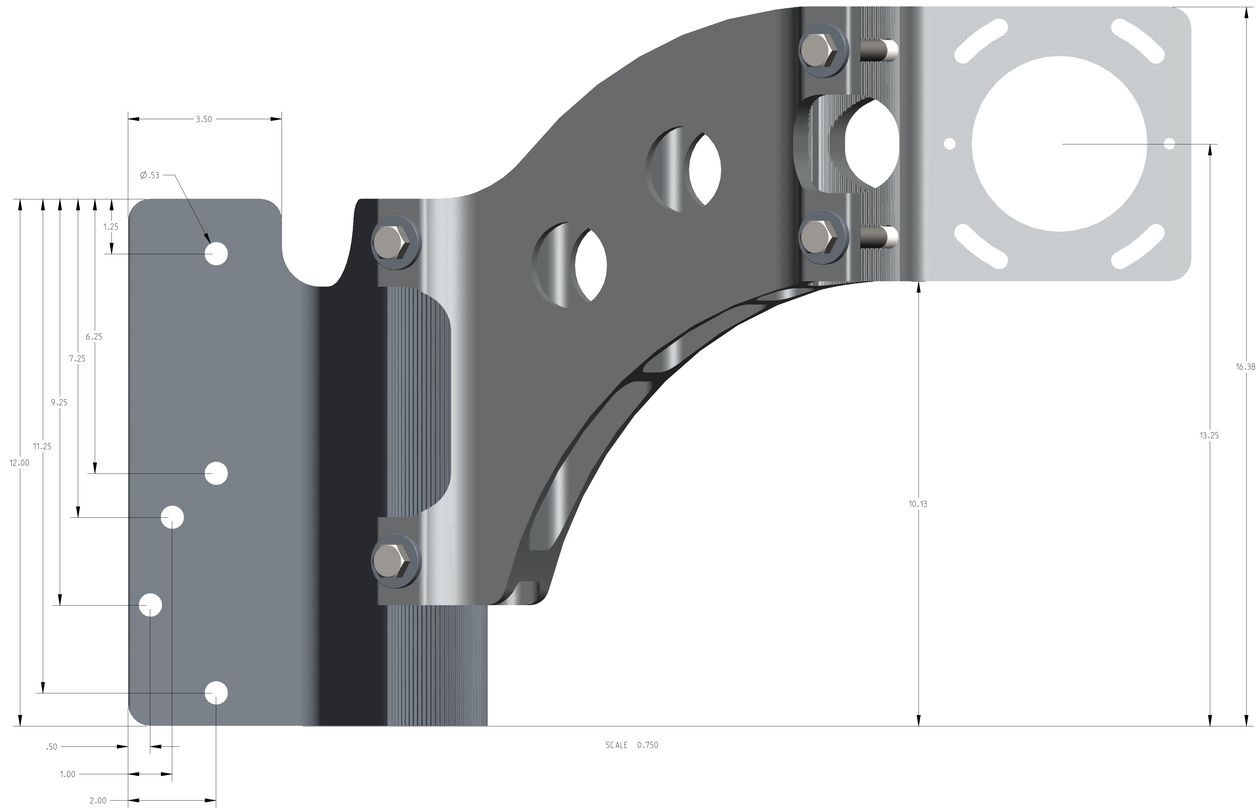

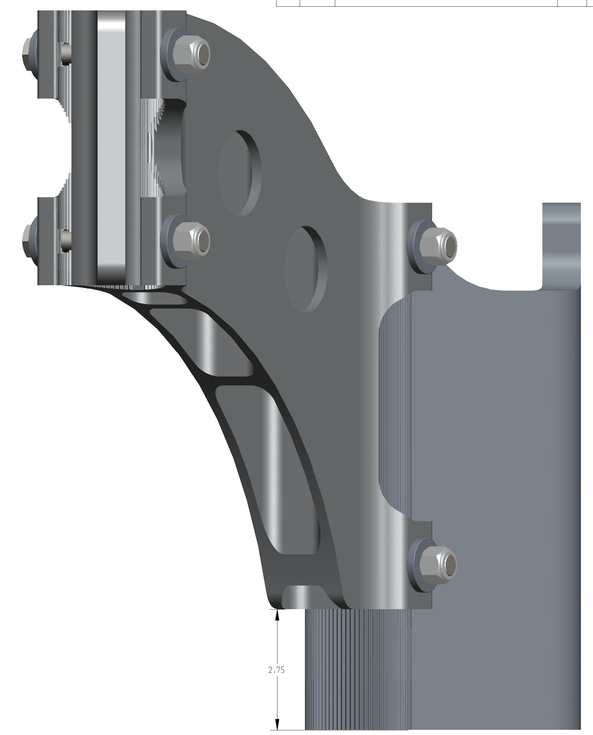

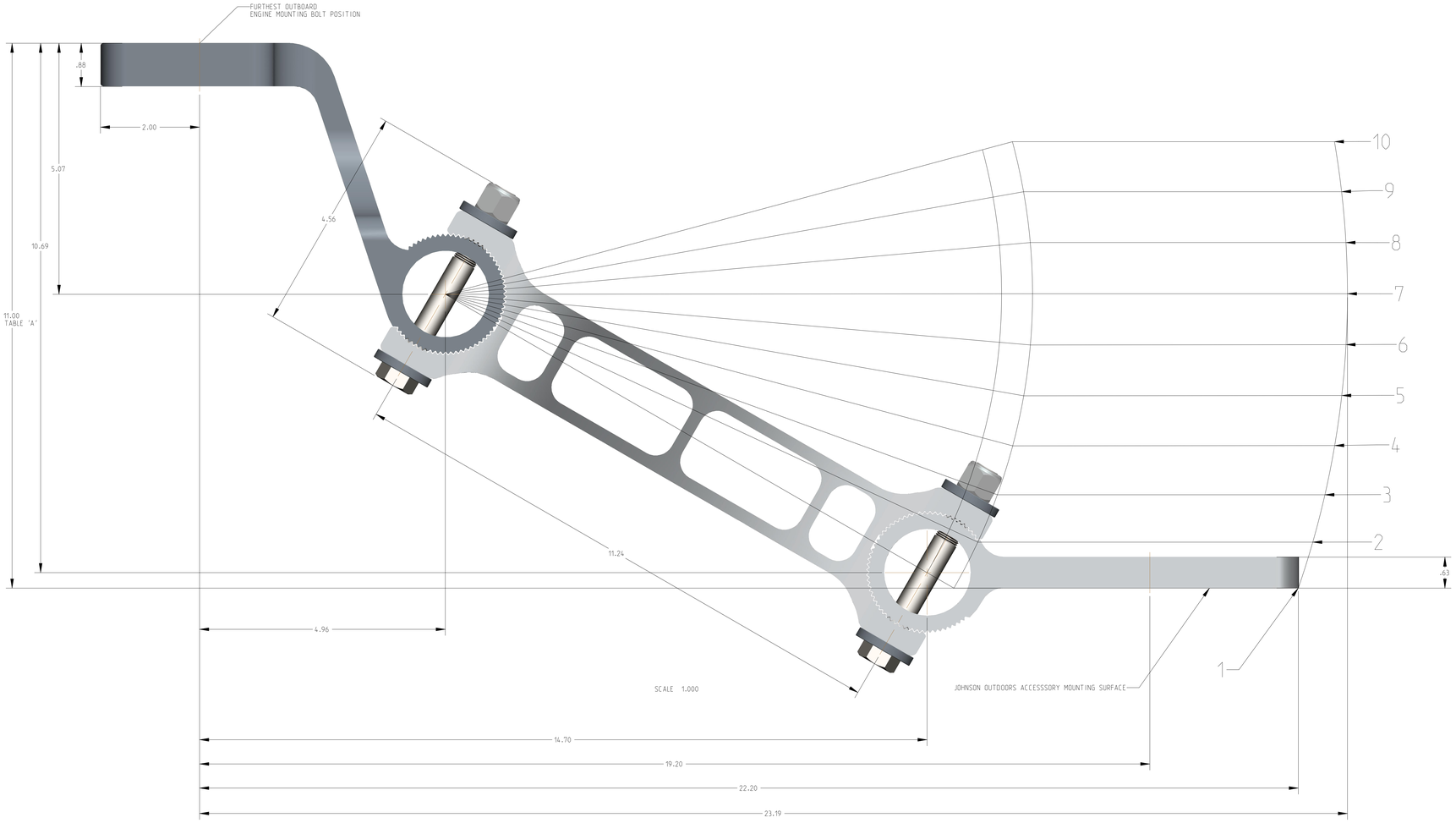

TABLE 'A'

SET-BACK POSITION	APPROXIMATE DIMENSION
10	2.0"
9	3.0"
8	4.0"
7	5.0"
6	6.0"
5	7.0"
4	8.0"
3	9.0"
2	10.0"
1	11.0"

TOLERANCES: UNLESS OTHERWISE SPECIFIED
.XXXX ±.0010 .XXX ±.005 .XX ±.010
X ±.015 FRACTIONAL ±1/64 ANGULAR ±0°30'

RoHS2 AND REACH COMPLIANCE
Supplier certifies that this part complies with 2011/65/EU (EU RoHS2) and (EC) No 1907/2006 (EU REACH). Upon request, supplier will furnish verification of compliance via: JO1 form, supplier declaration or analytical testing referencing JO1 part number.

CONFIDENTIAL PROPERTY- This document is the confidential property of Johnson Outdoors and is loaned subject to return upon demand. Title to same is never sold/transferred for any reason. This document is to be used only pursuant to written instructions of Johnson Outdoors. All rights to designs and inventions are reserved by Johnson Outdoors. Possession of this document is accepted subject to the foregoing.

QUALITY REQUIREMENTS:
Circled dimensions are critical. Dimensions marked * require Proof of Quality with each shipment.

THIRD ANGLE PROJECTION

DRAWN BY: | DATE:
SCALE: 0.3:1
MATERIAL:
LIFECYCLE STATUS:
U/M: IN.
SHEET 1 OF 1
REV:

JOHNSON OUTDOORS MARINE ELECTRONICS, INC.

PART NAME: SANDWICH ADAPTER BRACKET REF DRAWING - 1810302/03

PART NO: SMCH_ADPT-BRKT-DIMS

SIZE: E